Operating System-Overview

Dr Sukhandeep Kaur

What Does the Term Operating System Mean?

- An operating system is “fill in the blanks”
- What about:
  - Car
  - Airplane
  - Printer
  - Washing Machine
  - Toaster
  - Compiler
  - Etc.

What is an Operating System?

- A program that acts as an intermediary between a user of a computer and the computer hardware
- Operating system goals:
  - Execute user programs and make solving user problems easier
  - Make the computer system convenient to use
  - Use the computer hardware in an efficient manner

Computer System Structure

- Computer system can be divided into four components:
  - Hardware – provides basic computing resources
    - CPU, memory, I/O devices
  - Operating system
    - Controls and coordinates use of hardware among various applications and users
  - Application programs – define the ways in which the system resources are used to solve the computing problems of the users
    - Word processors, compilers, web browsers, database systems, video games
  - Users
    - People, machines, other computers

Abstract View of Components of Computer

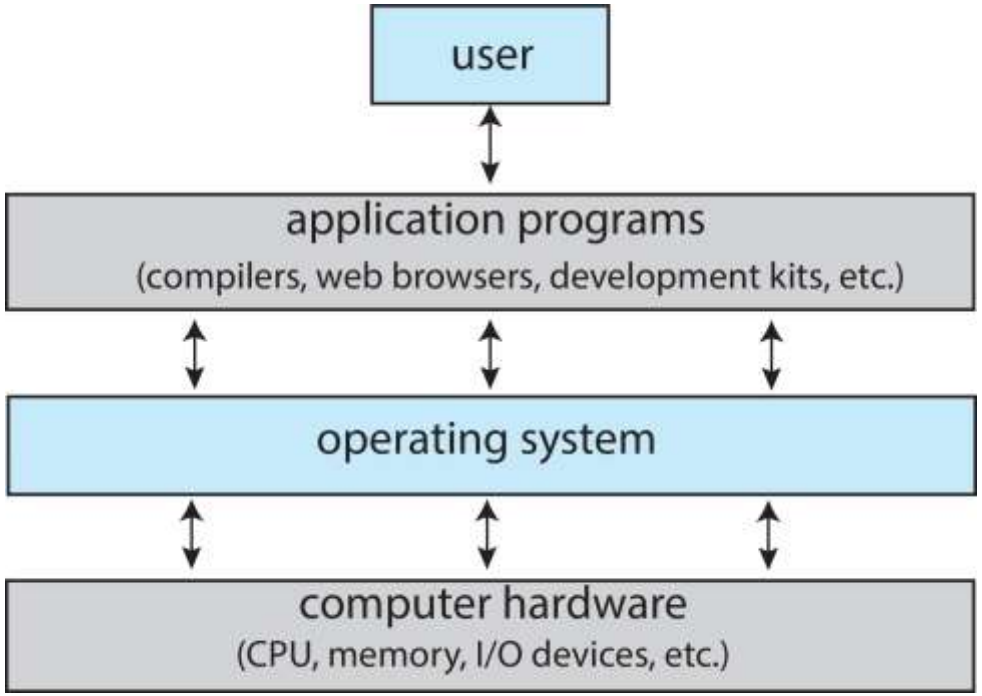

What Operating Systems Do

- Depends on the point of view
- Users want convenience, **ease of use** and **good performance**
  - Don't care about **resource utilization**
- But shared computer such as **mainframe** or **minicomputer** must keep all users happy
  - Operating system is a **resource allocator** and **control program** making efficient use of HW and managing execution of user programs
- Users of dedicate systems such as **workstations** have dedicated resources but frequently use shared resources from **servers**
- Mobile devices like smartphones and tables are resource poor, optimized for usability and battery life
  - Mobile user interfaces such as touch screens, voice recognition
- Some computers have little or no user interface, such as embedded computers in devices and automobiles
  - Run primarily without user intervention

Defining Operating Systems

- Term OS covers many roles
  - Because of myriad designs and uses of OSes
  - Present in toasters through ships, spacecraft, game machines, TVs and industrial control systems
  - Born when fixed use computers for military became more general purpose and needed resource management and program control

Operating System Definition

- No universally accepted definition
- "Everything a vendor ships when you order an operating system" is a good approximation
  - But varies wildly
- "The one program running at all times on the computer" is the **kernel**, part of the operating system
- Everything else is either
  - A ***system program*** (ships with the operating system, but not part of the kernel) , or
  - An ***application program***, all programs not associated with the operating system
- Today's OSes for general purpose and mobile computing also include ***middleware*** – a set of software frameworks that provide additional services to application developers such as databases, multimedia, graphics

Computer System Organization

- Computer-system operation
  - One or more CPUs, device controllers connect through common **bus** providing access to shared memory
  - Concurrent execution of CPUs and devices competing for me

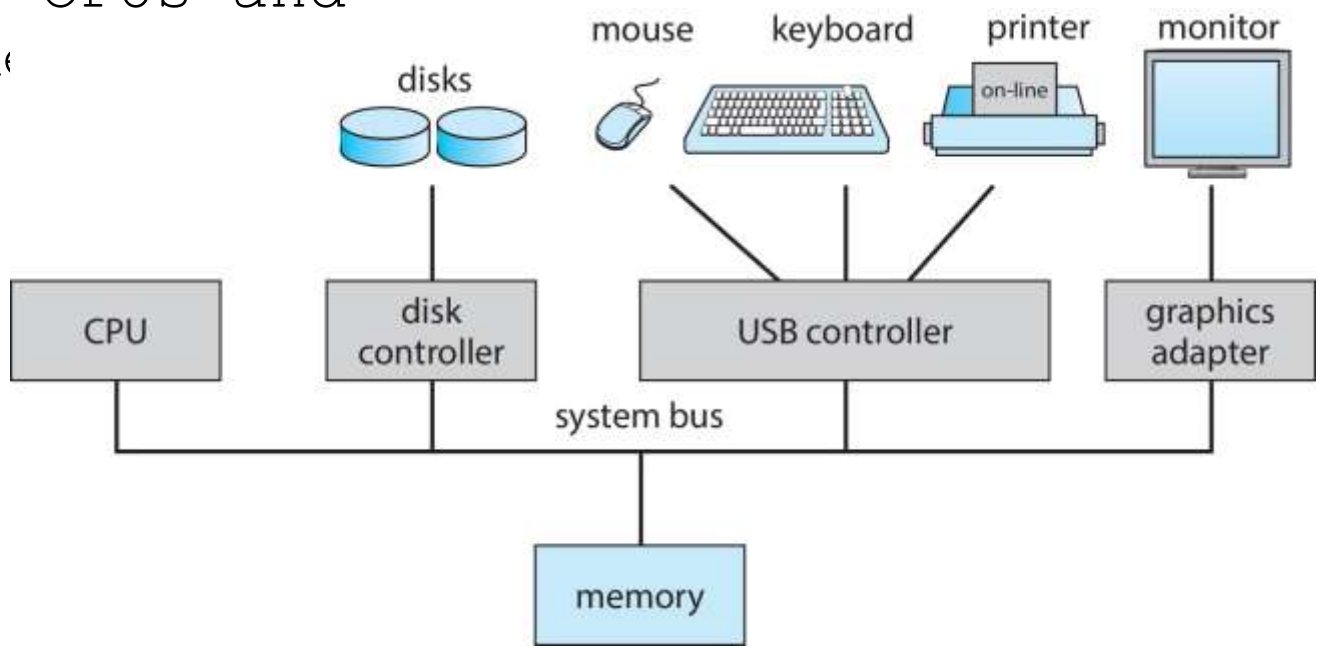

Computer-System Operation

- I/O devices and the CPU can execute concurrently
- Each device controller is in charge of a particular device type
- Each device controller has a local buffer
- Each device controller type has an operating system **device driver** to manage it
- CPU moves data from/to main memory to/from local buffers
- I/O is from the device to local buffer of controller
- Device controller informs CPU that it has finished its operation by causing an **interrupt**

Common Functions of Interrupts

- Interrupt transfers control to the interrupt service routine generally, through the **interrupt vector**, which contains the addresses of all the service routines
- Interrupt architecture must save the address of the interrupted instruction
- A **trap** or **exception** is a software-generated interrupt caused either by an error or a user request
- An operating system is **interrupt driven**

Interrupt Handling

- The operating system preserves the state of the CPU by storing the registers and the program counter
- Determines which type of interrupt has occurred:
- Separate segments of code determine what action should be taken for each type of interrupt

Interrupt-drive I/O Cycle

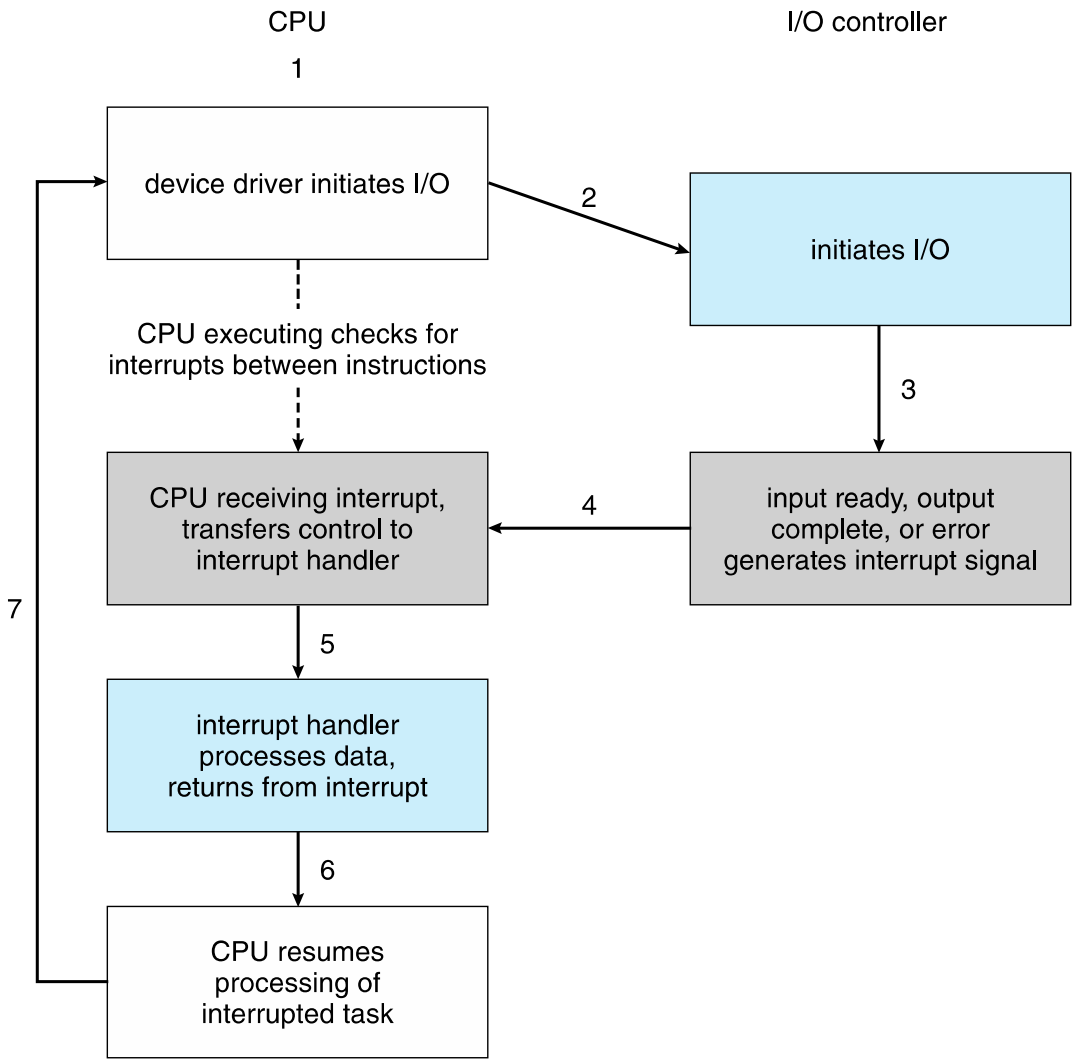

I/O Structure

- Two methods for handling I/O
  - After I/O starts, control returns to user program only upon I/O completion
  - After I/O starts, control returns to user program without waiting for I/O completion

I/O Structure (Cont.)

- After I/O starts, control returns to user program only upon I/O completion
  - Wait instruction idles the CPU until the next interrupt
  - Wait loop (contention for memory access)
  - At most one I/O request is outstanding at a time, no simultaneous I/O processing
- After I/O starts, control returns to user program without waiting for I/O completion
  - **System call** – request to the OS to allow user to wait for I/O completion
  - **Device-status table** contains entry for each I/O device indicating its type, address, and state
  - OS indexes into I/O device table to determine device status and to modify table entry to include interrupt

Storage Structure

Storage Structure

- Main memory – only large storage media that the CPU can access directly
  - **Random access**
  - Typically **volatile**
  - Typically **random-access memory** in the form of **Dynamic Random-access Memory (DRAM)**
- Secondary storage – extension of main memory that provides large **nonvolatile** storage capacity

Storage Structure (Cont.)

- **Hard Disk Drives** (**HDD**) – rigid metal or glass platters covered with magnetic recording material
  - Disk surface is logically divided into **tracks**, which are subdivided into **sectors**
  - The **disk controller** determines the logical interaction between the device and the computer
- **Non-volatile memory** (**NVM**) devices– faster than hard disks, nonvolatile
  - Various technologies
  - Becoming more popular as capacity and performance increases, price drops

Storage Definitions and Notation Review

The basic unit of computer storage is the **bit**. A bit can contain one of two values, 0 and 1. All other storage in a computer is based on collections of bits. Given enough bits, it is amazing how many things a computer can represent: numbers, letters, images, movies, sounds, documents, and programs, to name a few. A **byte** is 8 bits, and on most computers it is the smallest convenient chunk of storage. For example, most computers don't have an instruction to move a bit but do have one to move a byte. A less common term is **word**, which is a given computer architecture's native unit of data. A word is made up of one or more bytes. For example, a computer that has 64-bit registers and 64-bit memory addressing typically has 64-bit (8-byte) words. A computer executes many operations in its native word size rather than a byte at a time.

Computer storage, along with most computer throughput, is generally measured and manipulated in bytes and collections of bytes. A **kilobyte**, or KB , is 1,024 bytes; a **megabyte**, or **MB**, is $1{,}024^2$ bytes; a **gigabyte**, or **GB**, is $1{,}024^3$ bytes; a **terabyte**, or **TB**, is $1{,}024^4$ bytes; and a **petabyte**, or **PB**, is $1{,}024^5$ bytes. Computer manufacturers often round off these numbers and say that a megabyte is 1 million bytes and a gigabyte is 1 billion bytes. Networking measurements are an exception to this general rule; they are given in bits (because networks move data a bit at a time).

Storage Hierarchy

- Storage systems organized in hierarchy
  - Speed
  - Cost
  - Volatility
- **Caching** – copying information into faster storage system; main memory can be viewed as a cache for secondary storage
- **Device Driver** for each device controller to manage I/O
  - Provides uniform interface between controller and kernel

Storage-Device Hierarchy

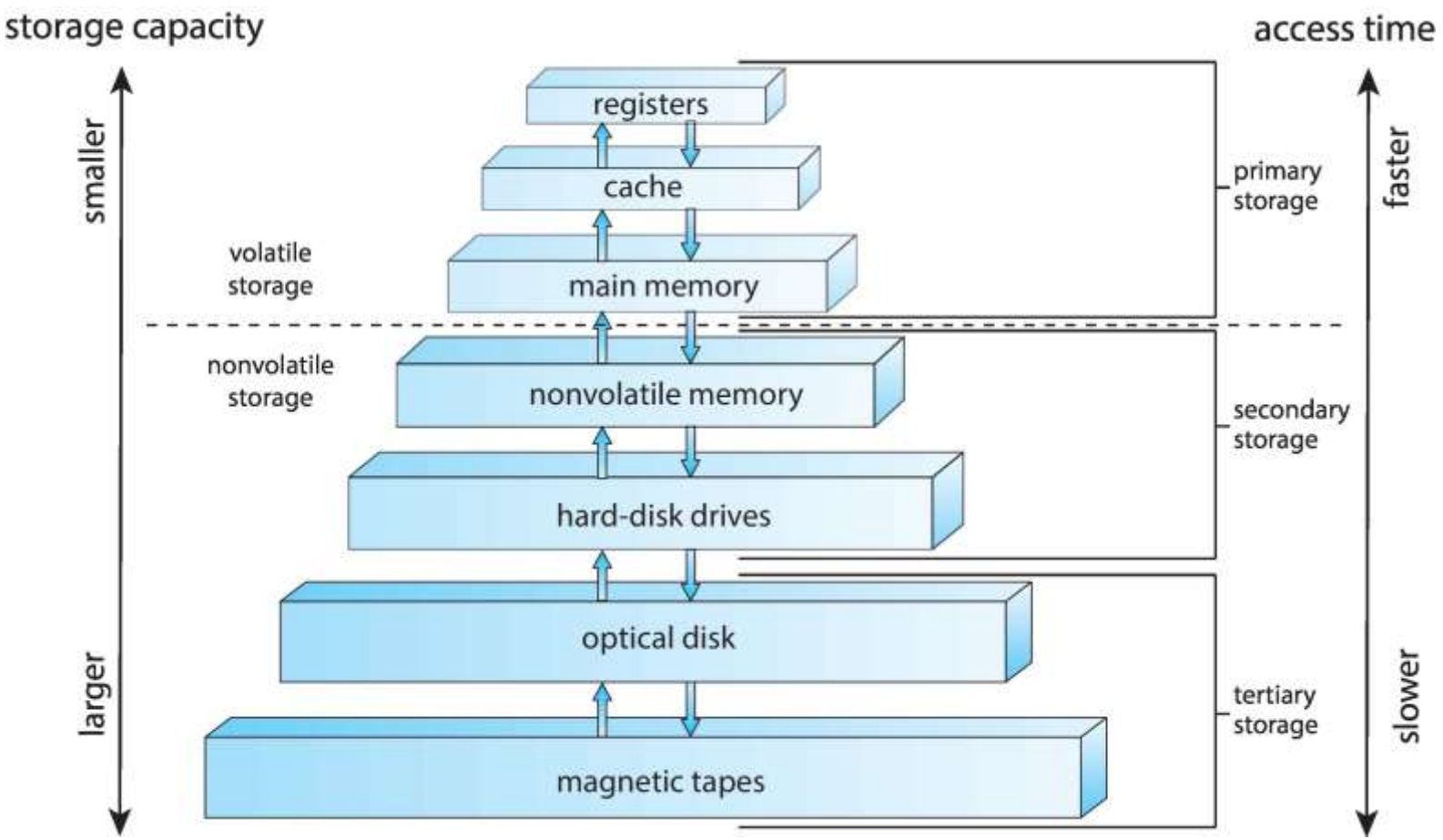

How a Modern Computer Works

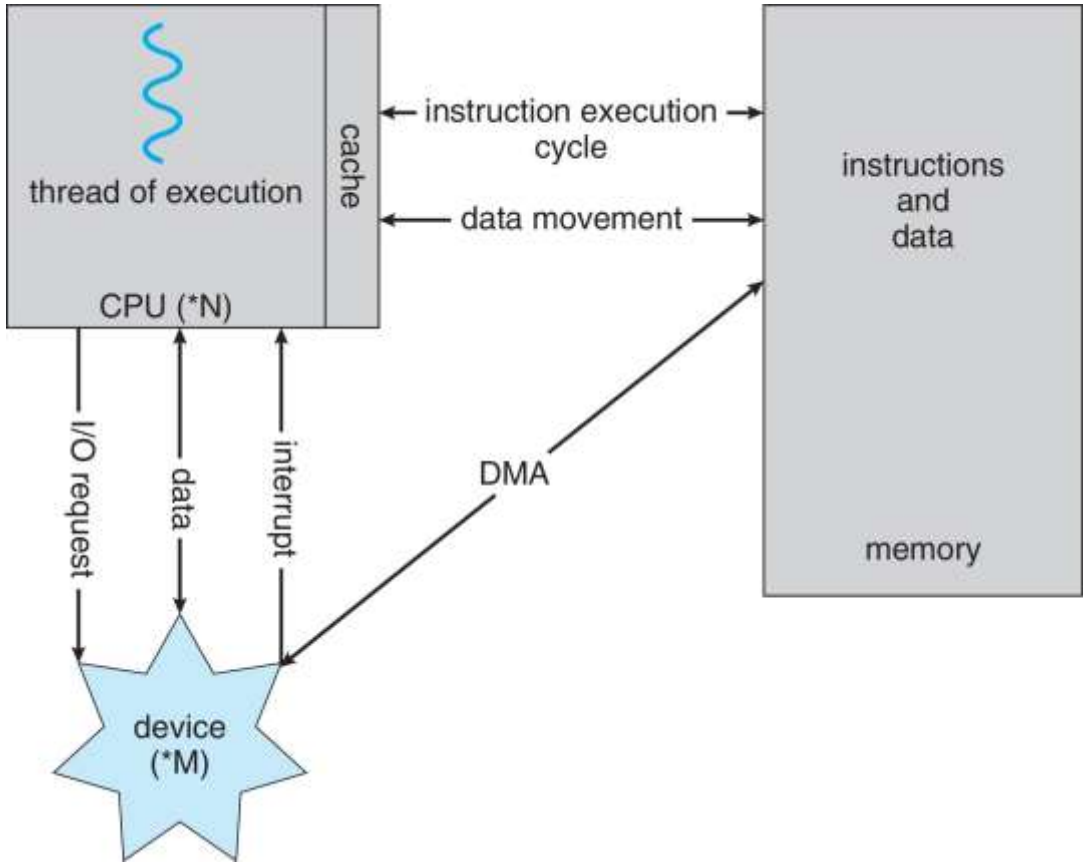

A von Neumann architecture

Direct Memory Access Structure

- Used for high-speed I/O devices able to transmit information at close to memory speeds
- Device controller transfers blocks of data from buffer storage directly to main memory without CPU intervention
- Only one interrupt is generated per block, rather than the one interrupt per byte

Operating-System Operations

- Bootstrap program - simple code to initialize the system, load the kernel
- Kernel loads
- Starts **system daemons** (services provided outside of the kernel or background processes which does not need user interations)
- Kernel **interrupt driven** (hardware and software)
  - Hardware interrupt by one of the devices
  - Software interrupt (**exception** or **trap**):
    - Software error (e.g., division by zero)
    - Request for operating system service - **system call**
    - Other process problems include infinite loop, processes modifying each other or the operating system

Multiprogramming (Batch system)

- Single user cannot always keep CPU and I/O devices busy
- Multiprogramming organizes jobs (code and data) so CPU always has one to execute
- A subset of total jobs in system is kept in memory
- One job selected and run via job scheduling
- When job has to wait (for I/O for example), OS switches to another job

Multitasking (Timesharing)

- A logical extension of Batch systems- the CPU switches jobs so frequently that users can interact with each job while it is running, creating interactive computing
  - Response time should be < 1 second
  - Each user has at least one program executing in memory ⇨ process
  - If several jobs ready to run at the same time ⇨ CPU scheduling
  - If processes don't fit in memory, swapping moves them in and out to run
  - Virtual memory allows execution of processes not completely in memory

Memory Layout for Multiprogrammed System

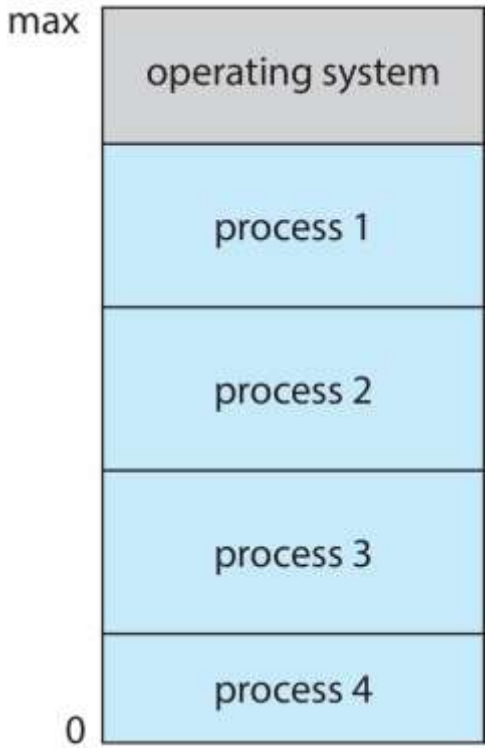

Dual-mode Operation

- **Dual-mode** operation allows OS to protect itself and other system components
  - **User mode** and **kernel mode**
- **Mode bit** provided by hardware
  - Provides ability to distinguish when system is running user code or kernel code.
  - When a user is running ⇨ mode bit is "user"
  - When kernel code is executing ⇨ mode bit is "kernel"
- How do we guarantee that user does not explicitly set the mode bit to "kernel"?
  - System call changes mode to kernel, return from call resets it to user
- Some instructions designated as **privileged**, only executable in kernel mode

Transition from User to Kernel Mode

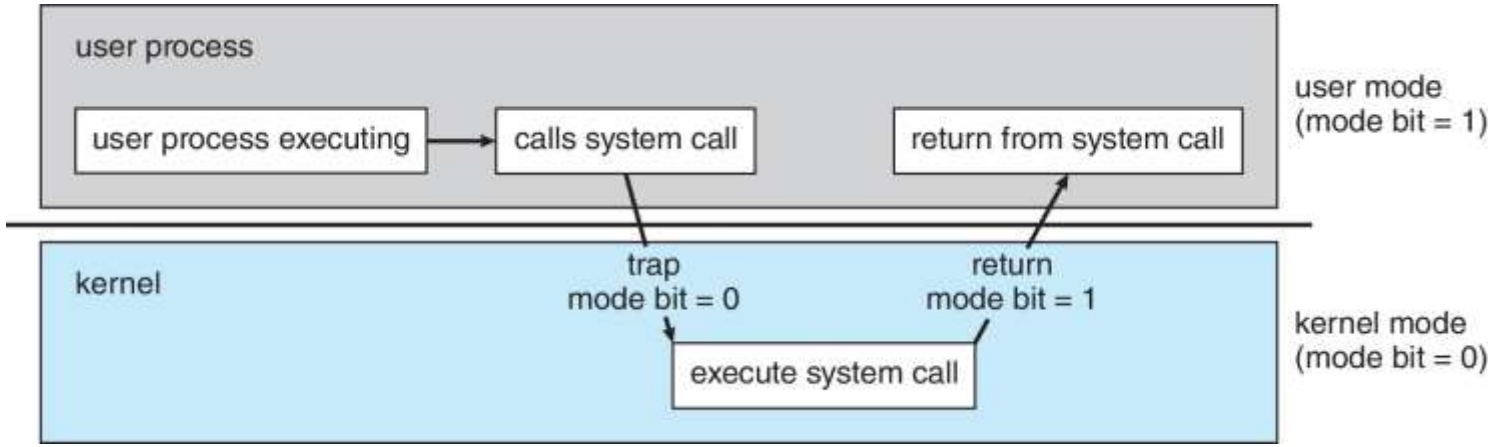

Timer

- Timer to prevent infinite loop (or process hogging resources)
  - Timer is set to interrupt the computer after some time period
  - Keep a counter that is decremented by the physical clock
  - Operating system set the counter (privileged instruction)
  - When counter zero generate an interrupt
  - Set up before scheduling process to regain control or terminate program that exceeds allotted time

Process Management

- A process is a program in execution. It is a unit of work within the system. Program is a ***passive entity***; process is an ***active entity***.
- Process needs resources to accomplish its task
  - CPU, memory, I/O, files
  - Initialization data
- Process termination requires reclaim of any reusable resources
- Single-threaded process has one **program counter** specifying location of next instruction to execute
  - Process executes instructions sequentially, one at a time, until completion
- Multi-threaded process has one program counter per thread
- Typically system has many processes, some user, some operating system running concurrently on

Process Management Activities

The operating system is responsible for the following activities in connection with process management:

- Creating and deleting both user and system processes
- Suspending and resuming processes
- Providing mechanisms for process synchronization
- Providing mechanisms for process communication
- Providing mechanisms for deadlock handling

Memory Management

- To execute a program all (or part) of the instructions must be in memory
- All (or part) of the data that is needed by the program must be in memory
- Memory management determines what is in memory and when
  - Optimizing CPU utilization and computer response to users
- Memory management activities
  - Keeping track of which parts of memory are currently being used and by whom
  - Deciding which processes (or parts thereof) and data to move into and out of memory
  - Allocating and deallocating memory space as needed

File-system Management

- OS provides uniform, logical view of information storage
  - Abstracts physical properties to logical storage unit - **file**
  - Each medium is controlled by device (i.e., disk drive, tape drive)
    - Varying properties include access speed, capacity, data-transfer rate, access method (sequential or random)
- File-System management
  - Files usually organized into directories
  - Access control on most systems to determine who can access what
  - OS activities include
    - Creating and deleting files and directories
    - Primitives to manipulate files and directories
    - Mapping files onto secondary storage
    - Backup files onto stable (non-volatile) storage media

Mass-Storage Management

- Usually disks used to store data that does not fit in main memory or data that must be kept for a “long” period of time
- Proper management is of central importance
- Entire speed of computer operation hinges on disk subsystem and its algorithms
- OS activities
  - Mounting and unmounting
  - Free-space management
  - Storage allocation
  - Disk scheduling
  - Partitioning
  - Protection

Caching

- Important principle, performed at many levels in a computer (in hardware, operating system, software)
- Information in use copied from slower to faster storage temporarily
- Faster storage (cache) checked first to determine if information is there
  - If it is, information used directly from the cache (fast)
  - If not, data copied to cache and used there
- Cache smaller than storage being cached
  - Cache management important design problem
  - Cache size and replacement policy

Characteristics of Various Types of Storage

Level	1	2	3	4	5
Name	registers	cache	main memory	solid-state disk	magnetic disk
Typical size	< 1 KB	< 16MB	< 64GB	< 1 TB	< 10 TB
Implementation technology	custom memory with multiple ports CMOS	on-chip or off-chip CMOS SRAM	CMOS SRAM	flash memory	magnetic disk
Access time (ns)	0.25-0.5	0.5-25	80-250	25,000-50,000	5,000,000
Bandwidth (MB/sec)	20,000-100,000	5,000-10,000	1,000-5,000	500	20-150
Managed by	compiler	hardware	operating system	operating system	operating system
Backed by	cache	main memory	disk	disk	disk or tape

Movement between levels of storage hierarchy can be explicit or implicit

Migration of data "A" from Disk to Register

- Multitasking environments must be careful to use most recent value, no matter where it is stored in the storage hierarchy

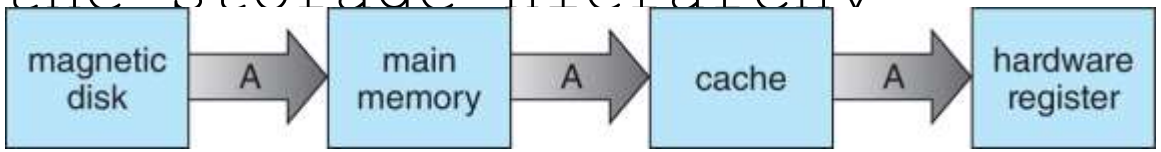

- Multiprocessor environment must provide **cache coherency** in hardware such that all CPUs have the most recent value in their cache
- Distributed environment situation even more complex
  - Several copies of a datum can exist
  - Various solutions covered in Chapter 19

I/O Subsystem

- One purpose of OS is to hide peculiarities of hardware devices from the user
- I/O subsystem responsible for
  - Memory management of I/O including buffering (storing data temporarily while it is being transferred), caching (storing parts of data in faster storage for performance), spooling (the overlapping of output of one job with input of other jobs)
  - General device-driver interface
  - Drivers for specific hardware devices

Protection and Security

- **Protection** – any mechanism for controlling access of processes or users to resources defined by the OS
- **Security** – defense of the system against internal and external attacks
  - Huge range, including denial-of-service, worms, viruses, identity theft, theft of service
- Systems generally first distinguish among users, to determine who can do what
  - User identities (**user IDs**, security IDs) include name and associated number, one per user
  - User ID then associated with all files, processes of that user to determine access control
  - Group identifier (**group ID**) allows set of users to be defined and controls managed, then also associated with each process, file
  - **Privilege escalation** allows user to change to effective ID with more rights

Virtualization

- Allows operating systems to run applications within other OSes
  - Vast and growing industry
- **Emulation** used when source CPU type different from target type (i.e. PowerPC to Intel x86)
  - Generally slowest method
  - When computer language not compiled to native code – **Interpretation**
- **Virtualization** – OS natively compiled for CPU, running **guest** OSes also natively compiled
  - Consider VMware running WinXP guests, each running applications, all on native WinXP **host** OS
  - **VMM** (virtual machine Manager) provides virtualization services

Virtualization (cont.)

- Use cases involve laptops and desktops running multiple OSes for exploration or compatibility
  - Apple laptop running Mac OS X host, Windows as a guest
  - Developing apps for multiple OSes without having multiple systems
  - Quality assurance testing applications without having multiple systems
  - Executing and managing compute environments within data centers
- VMM can run natively, in which case they are also the host
  - There is no general-purpose host then (VMware ESX and Citrix XenServer)

Computing Environments - Virtualization

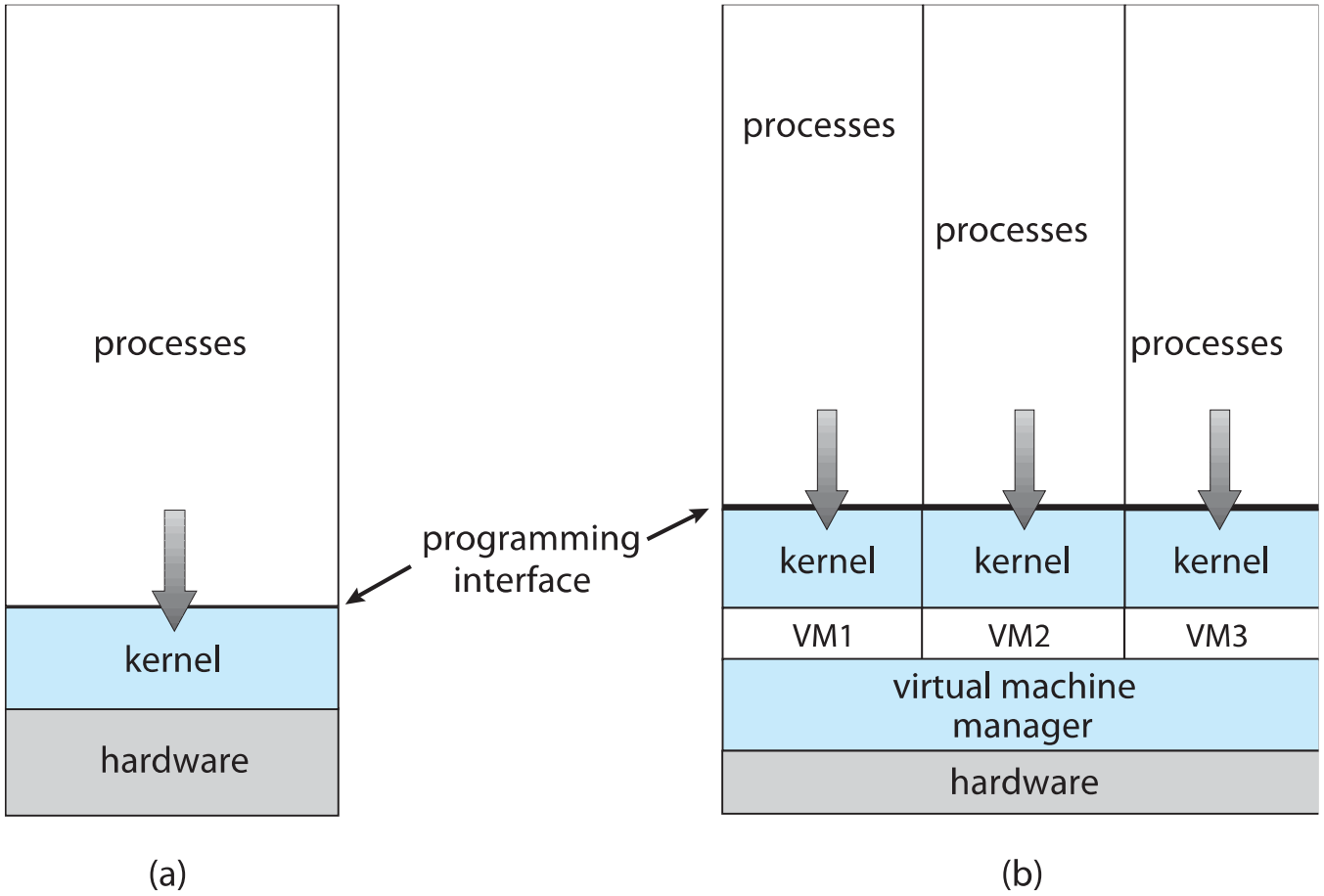

uncertainty awareness in 3d scene for autonomous driving

Operating System Structure

- General-purpose OS is very large program
- Various ways to structure ones
  - Simple structure – MS-DOS
  - More complex – UNIX
  - Layered – an abstraction
  - Microkernel – Mach

Monolithic Structure – Original UNIX

- UNIX – limited by hardware functionality, the original UNIX operating system had limited structuring.
- The UNIX OS consists of two separable parts
  - Systems programs
  - The kernel
    - Consists of everything below the system-call interface and above the physical hardware
    - Provides the file system, CPU scheduling, memory management, and other operating-system functions; a large number of functions for one level

Traditional UNIX System Structure

Beyond simple but not fully layered

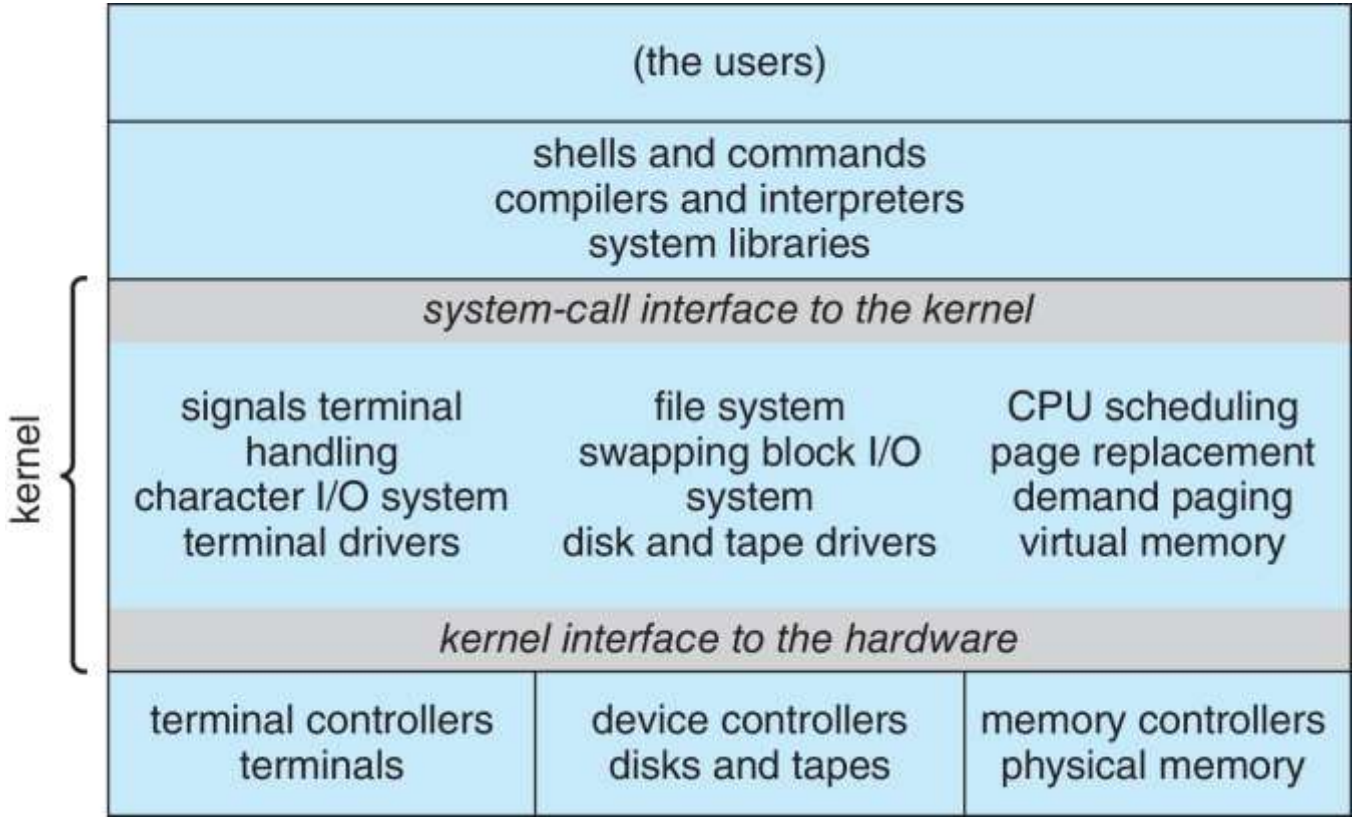

Linux System Structure

Monolithic plus modular design

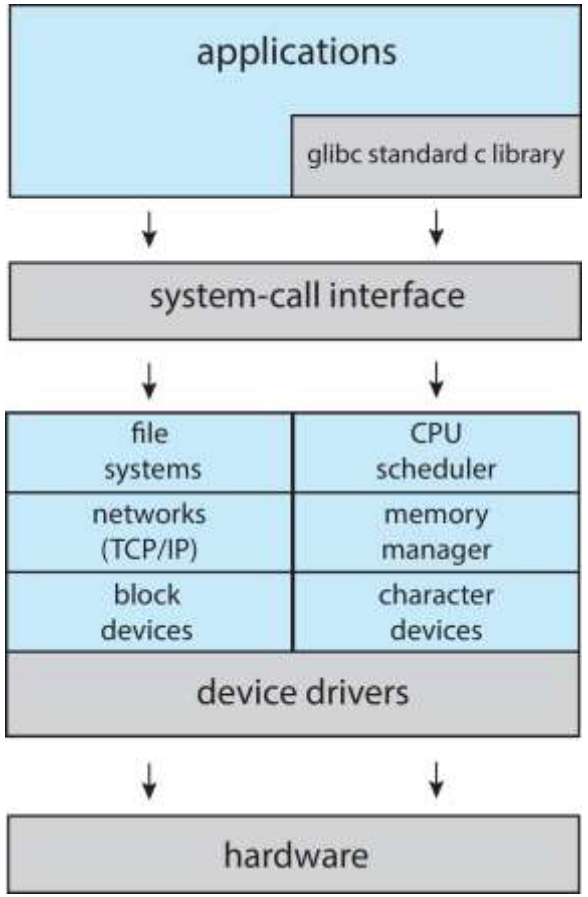

Layered Approach

- The operating system is divided into a number of layers (levels), each built on top of lower layers. The bottom layer (layer 0), is the hardware; the highest (layer N) is the user interface.
- With modularity, layers are selected such that each uses functions (operations) and services of only

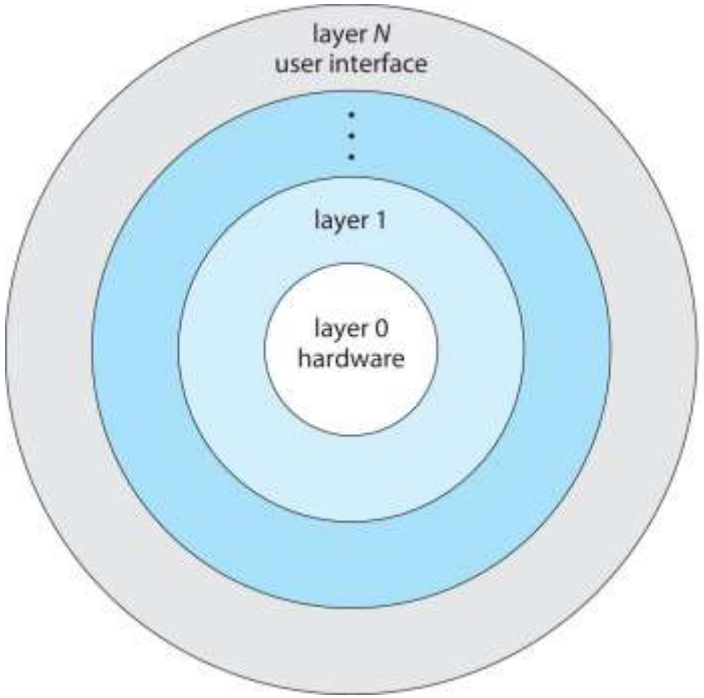

Microkernels

- Moves as much from the kernel into user space
- **Mach** is an example of **microkernel**
  - Mac OS X kernel (**Darwin**) partly based on Mach
- Communication takes place between user modules using **message passing**
- Benefits:
  - Easier to extend a microkernel
  - Easier to port the operating system to new architectures
  - More reliable (less code is running in kernel mode)
  - More secure
- Detriments:
  - Performance overhead of user space to kernel space communication

Microkernel System Structure

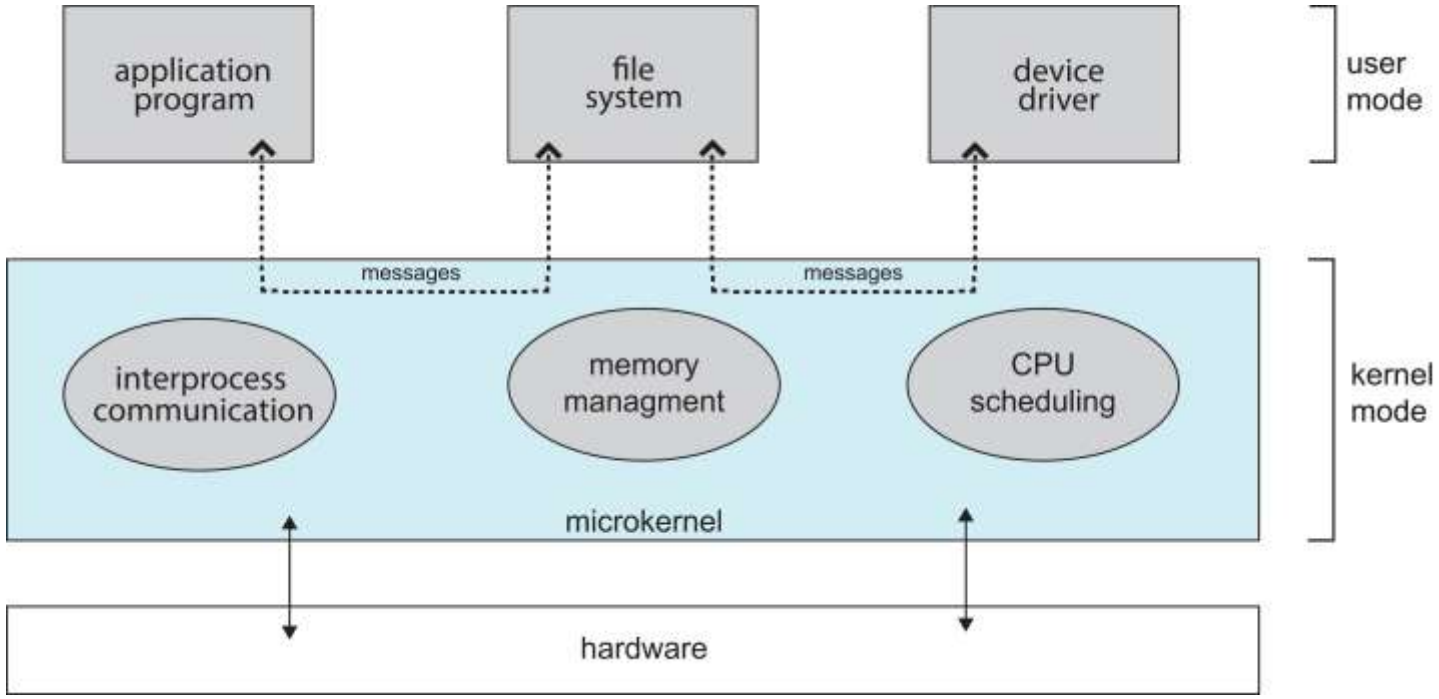

Modules

- Many modern operating systems implement **loadable kernel modules** (**LKMs**)
  - Uses object-oriented approach
  - Each core component is separate
  - Each talks to the others over known interfaces
  - Each is loadable as needed within the kernel
- Overall, similar to layers but with more flexible
  - Linux, Solaris, etc.

Hybrid Systems

- Most modern operating systems are not one pure model
  - Hybrid combines multiple approaches to address performance, security, usability needs
  - Linux and Solaris kernels in kernel address space, so monolithic, plus modular for dynamic loading of functionality
  - Windows mostly monolithic, plus microkernel for different subsystem ***personalities***
- Apple Mac OS X hybrid, layered, **Aqua** UI plus **Cocoa** programming environment
  - Below is kernel consisting of Mach microkernel and BSD Unix parts, plus I/O kit and dynamically loadable modules (called **kernel extensions**)

macOS and iOS Structure

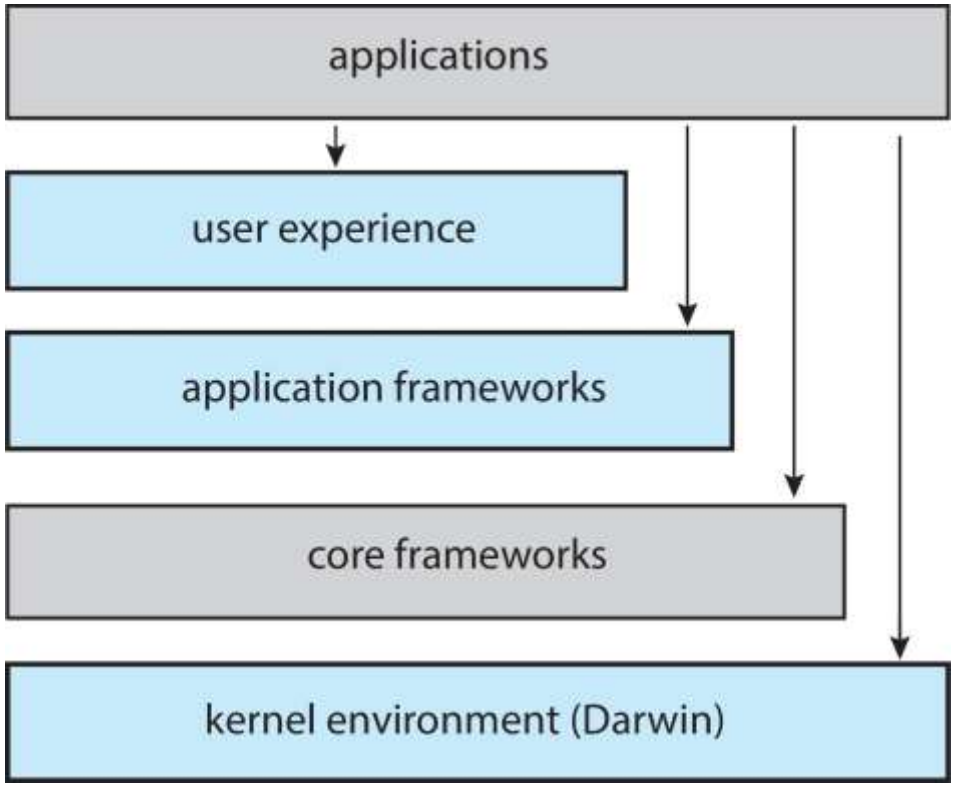

Darwin

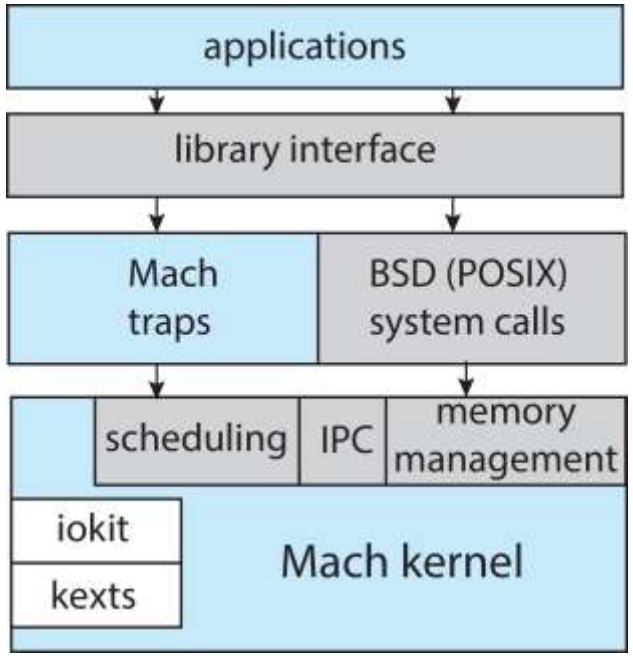
applications
library interface
Mach traps
BSD (POSIX) system calls
scheduling
IPC
memory management
iokit
kexts
Mach kernel

Android

- Developed by Open Handset Alliance (mostly Google)
  - Open Source
- Similar stack to iOS
- Based on Linux kernel but modified
  - Provides process, memory, device-driver management
  - Adds power management
- Runtime environment includes core set of libraries and Dalvik virtual machine
  - Apps developed in Java plus Android API
    - Java class files compiled to Java bytecode then translated to executable thnn runs in Dalvik VM
- Libraries include frameworks for web browser (webkit), database (SQLite), multimedia, smaller libc

Android Architecture

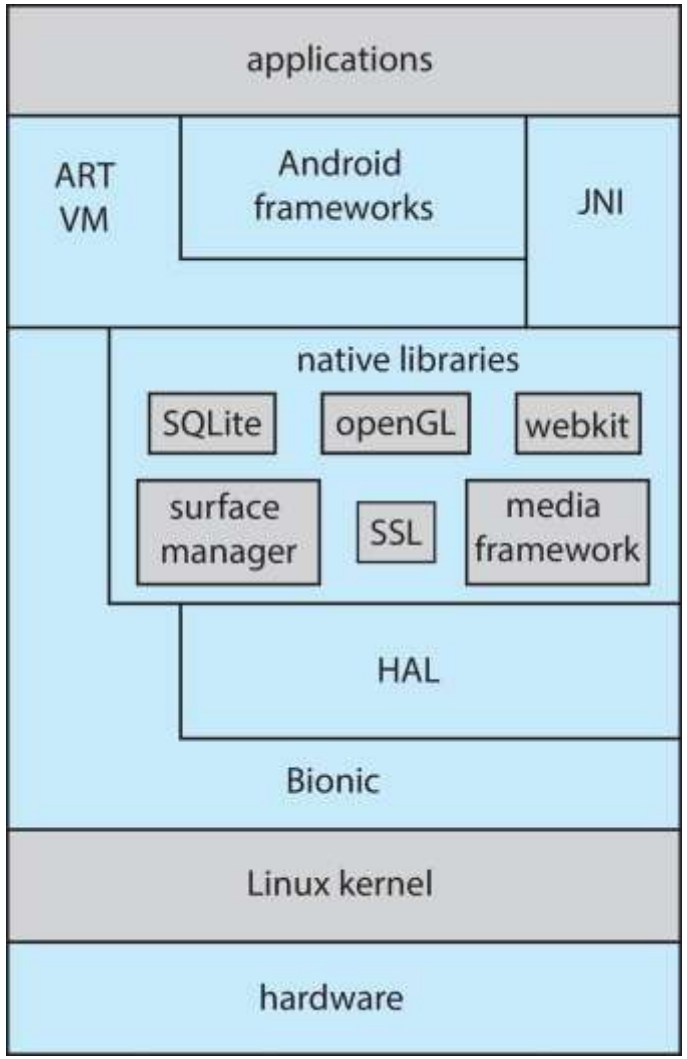

Building and Booting an Operating System

- Operating systems generally designed to run on a class of systems with variety of peripherals
- Commonly, operating system already installed on purchased computer
  - But can build and install some other operating systems
  - If generating an operating system from scratch
    - Write the operating system source code
    - Configure the operating system for the system on which it will run
    - Compile the operating system
    - Install the operating system
    - Boot the computer and its new operating system

Building and Booting Linux

- Download Linux source code (http://www.kernel.org)
- Configure kernel via "make menuconfig"
- Compile the kernel using "make"
  - Produces vmlinuz, the kernel image
  - Compile kernel modules via "make modules"
  - Install kernel modules into vmlinuz via "make modules_install"
  - Install new kernel on the system via "make install"

System Boot

- When power initialized on system, execution starts at a fixed memory location
- Operating system must be made available to hardware so hardware can start it
  - Small piece of code – **bootstrap loader**, **BIOS**, stored in **ROM** or **EEPROM** locates the kernel, loads it into memory, and starts it
  - Sometimes two-step process where **boot block** at fixed location loaded by ROM code, which loads bootstrap loader from disk
  - Modern systems replace BIOS with **Unified Extensible Firmware Interface** (**UEFI**)
- Common bootstrap loader, **GRUB**, allows selection of kernel from multiple disks, versions, kernel options
- Kernel loads and system is then **running**
- Boot loaders frequently allow various boot states, such as single user mode